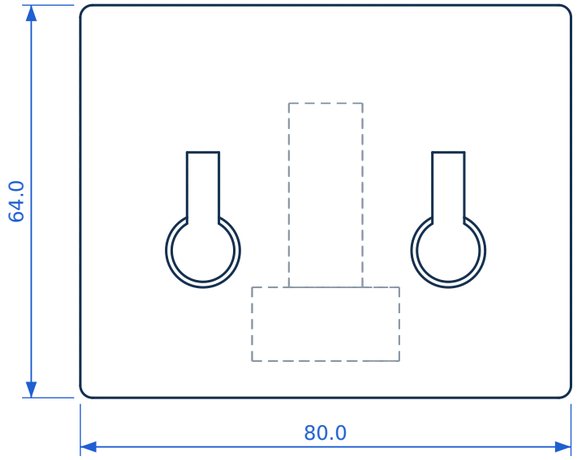

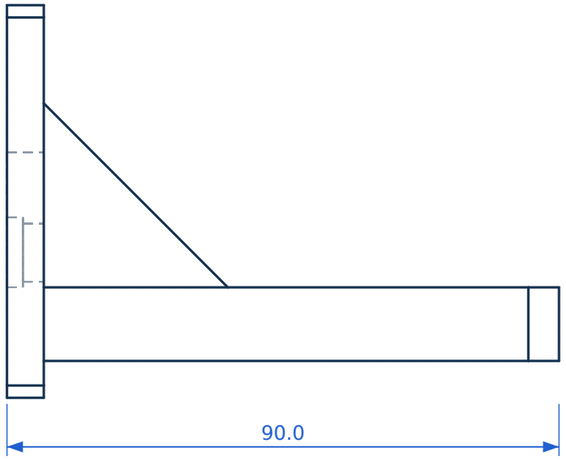

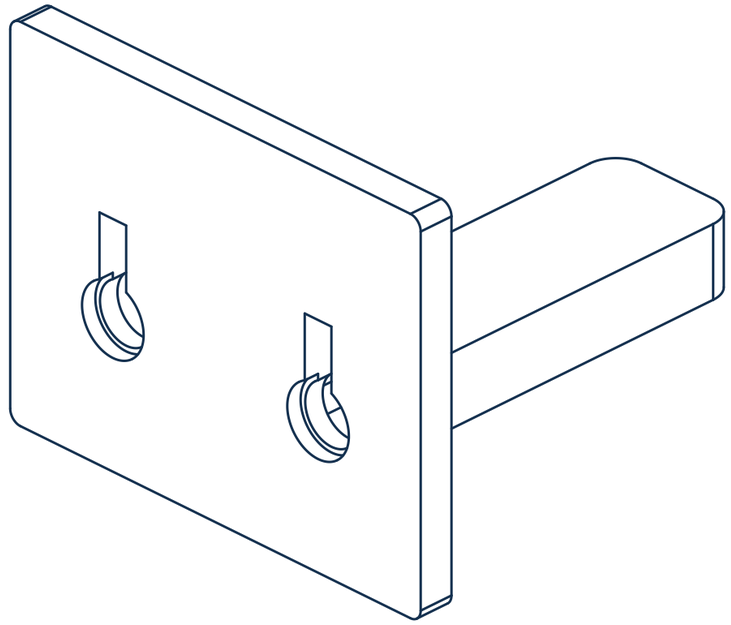

BILL OF MATERIALS

bracket (printed)	1
5 × 50 mm wood screw with a head no wider than 10 mm (use wall plugs in masonry or drywall)	2

ASSEMBLY

1. Drive two screws 40 mm apart and level, leaving about 4 mm of each sticking out from the wall.
2. Push the bracket onto the wall so both screw heads go through the round openings.
3. Slide it down 16 mm until the screws sit at the top of the slots. To remove it, lift it 16 mm and pull it away.

TITLE

Keyhole wall bracket, 90 mm reach

PART / SHEET

WB-K60 · ASSEMBLY

SCALE 1:1 UNITS mm THIRD-ANGLE — SHEET 1/2

MATERIAL see BOM — Demiurge · 2026-11-22

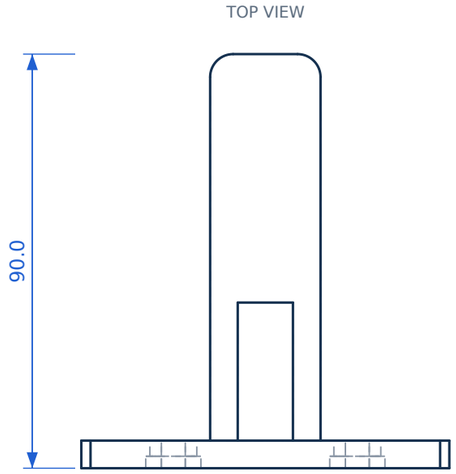

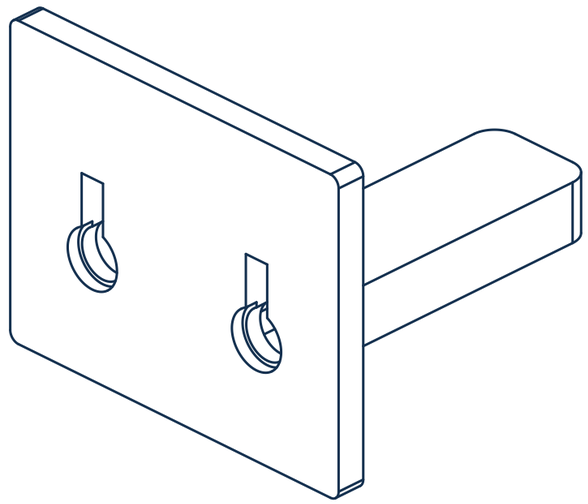

ISOMETRIC (not to scale)

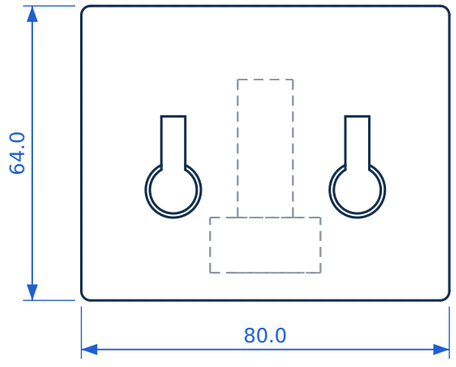

FRONT VIEW

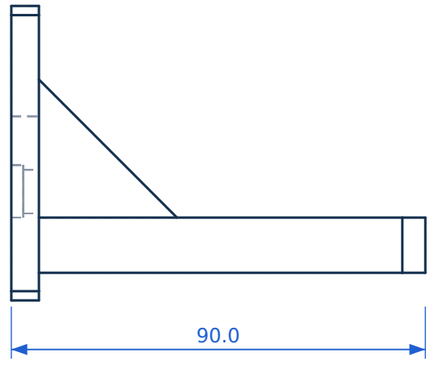

RIGHT VIEW

KEY DIMENSIONS

Plate	80 x 64 x 6 mm
Reach	90 mm
Keyhole entry	Ø10.2 mm / 5.2 mm slot
Keyhole centres	40 mm
Overall (x × y × z)	80.0 × 90.0 × 64.0
Volume	58.4 cm³

MEASURED FROM THE MODEL

keyhole_entry_diameter	10.2 ✓
keyhole_slot_width	5.2 ✓
keyhole_head_pocket	11.996 ✓
plate_behind_pocket	3.4 ✓
keyhole_spacing	40 ✓
plate_width	80 ✓
plate_height	64 ✓
plate_thickness	6 ✓

TITLE

Keyhole wall bracket, 90 mm reach

PART / SHEET

WB-K60 · BRACKET

SCALE 1:1.33 UNITS mm THIRD-ANGLE — SHEET 2/2

MATERIAL PETG — Demiurge · 2026-11-22