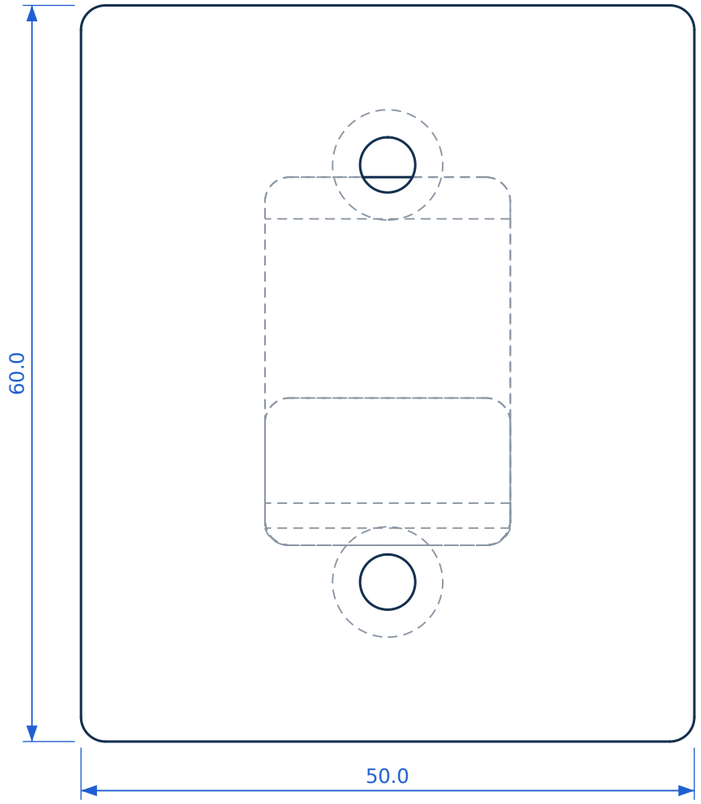

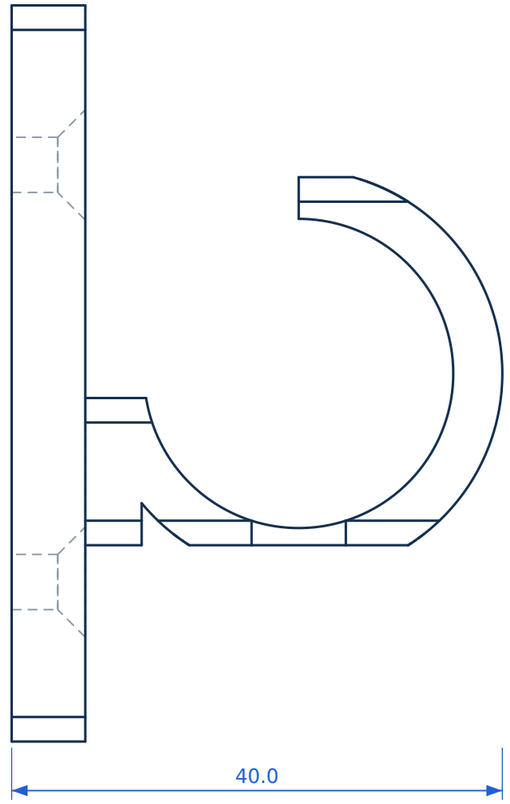

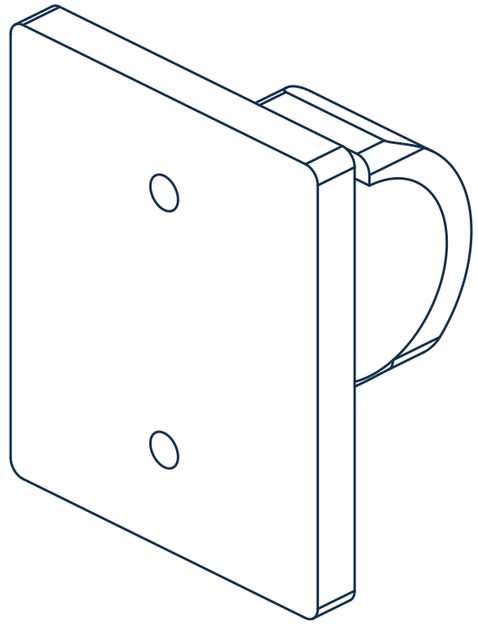

BILL OF MATERIALS

hook (printed)	1
4 × 40 mm countersunk wood screw (use wall plugs in masonry or drywall)	2

ASSEMBLY

1. Drill two 4 mm pilot holes 34 mm apart at the wanted height.
2. Hold the back plate flat against the wall and drive both screws through the countersunk holes until flush.
3. Check the hook is level, then drop the handle into the cradle from above.

TITLE

Wall hook for a 25 mm broom or mop handle

PART / SHEET

WH-25 · ASSEMBLY

SCALE 2:1 UNITS mm THIRD-ANGLE — SHEET 1/2

MATERIAL see BOM — Demiurge · 2026-11-22

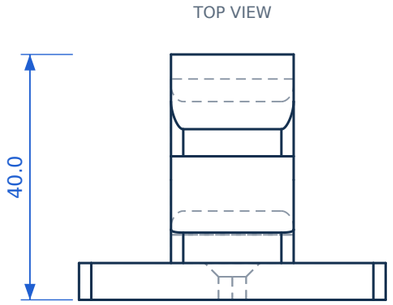

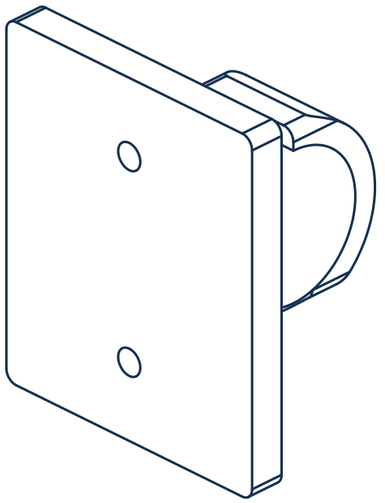

ISOMETRIC (not to scale)

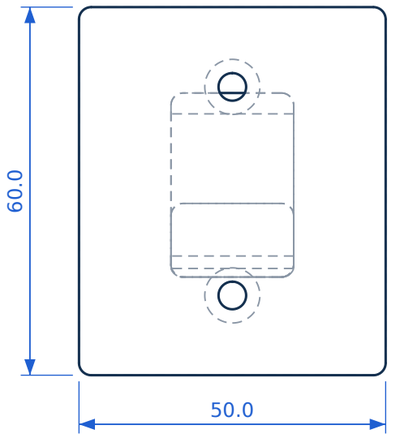

FRONT VIEW

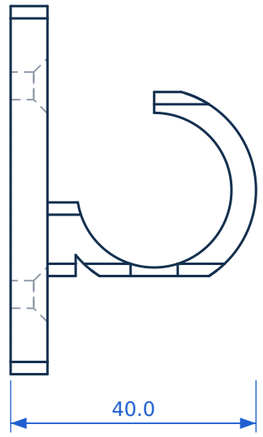

RIGHT VIEW

KEY DIMENSIONS

Cup bore	25.2 mm
Reach from wall	40.0 mm
Plate	50 x 60 x 6 mm
Screw centres	34 mm
Overall (x × y × z)	50.0 × 40.0 × 60.0
Volume	23.0 cm³

MEASURED FROM THE MODEL

hook_inner_diameter	25.2 ✓
hook_reach	40 ✓
plate_width	50 ✓
plate_height	60 ✓
plate_thickness	6 ✓
screw_hole_diameter	4.5 ✓
screw_spacing	34 ✓

TITLE

Wall hook for a 25 mm broom or mop handle

PART / SHEET

WH-25 · HOOK

SCALE 1:1 UNITS mm THIRD-ANGLE — SHEET 2/2

MATERIAL PETG — Demiurge · 2026-11-22